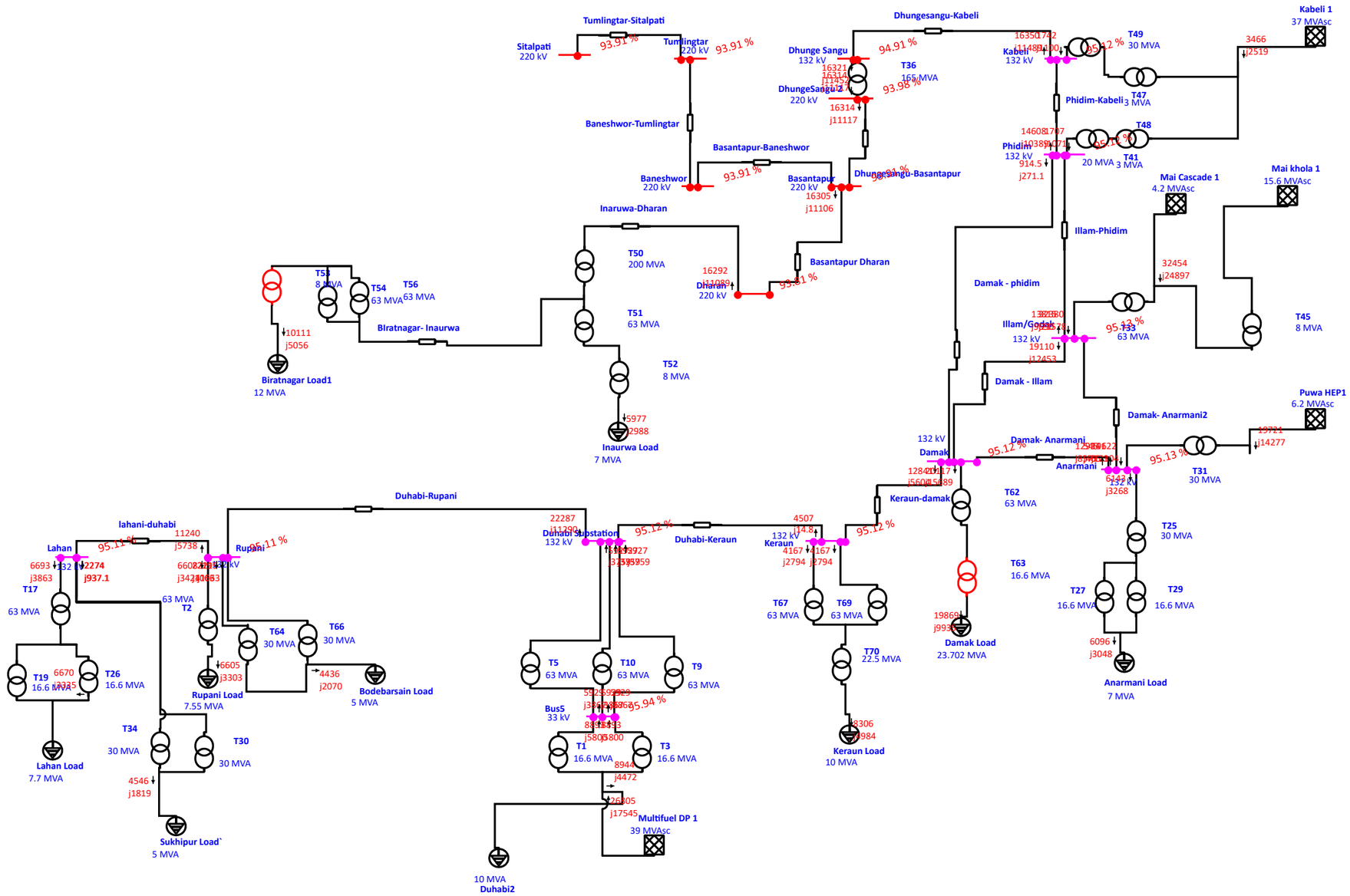One-Line Diagram - OLV1 (Load Flow Analysis)